Fig. 75 - Swivel Attachment

Size Range — 3/8” Rod Attachment

Material — Carbon Steel

Function — There are three recommended applications for this product. Fig. 75 may be used as a branch line restraint for structural attachment to anchor bolt, beam clamp, etc. It may be used in a pitched or sloped roof application, to meet requirements of NFPA 13 (2010) 9.1.2.6. It may be used as an upper attachment with short hanger rod to omit seismic bracing.

Approvals — Underwriters’ Laboratories Listed in the USA (UL) and Canada (cUL) to support up to 4” pipe. Meets requirements of Uniform Building Code (UBC) 1997 Table O, Section 3.B.

Finish — Electro-Galvanized

Order By —Figure number

Patent #7,887,248

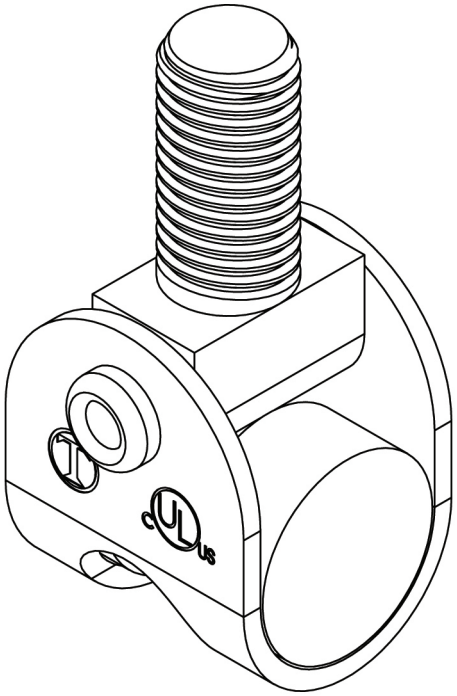

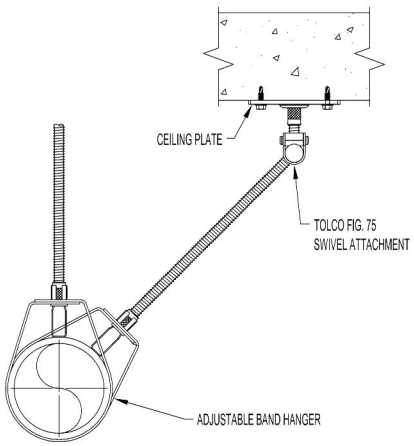

May be used as a structural attachment component of a branch line restraint

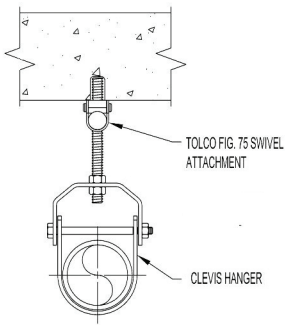

May be used as an upper attachment with short hanger rod to omit seismic bracing.

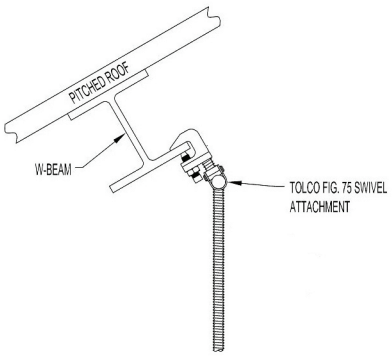

May be used with a pitched roof application, to meet requirements of NFPA 13(2010) Sec 9.1.2.5.

COOPER B-LINE 1375 Sampson Ave • Corona, CA 92879 • 800.786.5266 • FAX: 951.737.0330